Digital mobile photographic X - ray machine

MY-D019D-C

Introduction

Used in general ward | ICU | medical examination vehicle/emergency vehicle/door-to-door consultation disaster relief and war zone hospitals

MY-D019D-C is a compact and versatile digital X-ray photography system that saves you space and improves productivity.

- Flexible and efficient suitable for a variety of needs
- Compact structure stronger applicability
- Low input cost and low maintenance cost

Product features

Compact, flexible and efficient structure

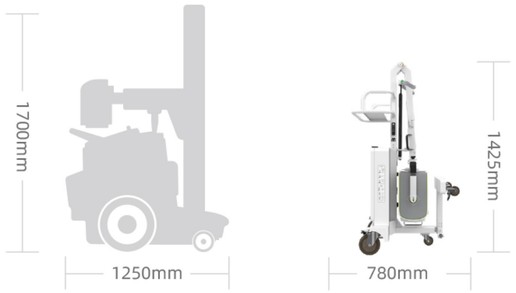

It can significantly reduce the weight of the device compared to traditional mobile devices, and it can also significantly reduce the external size, allowing you to move more smoothly in the hospital and bedside.

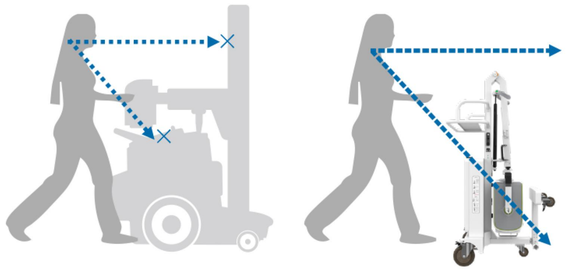

The compact movement mode ensures good visibility and passability, enhanced security when passing others in the hospital, and ease of movement in confined Spaces.

MY-D019D-C is compact and can be easily stored under a shelf or in a corner of a room, saving space.

Flexible and smooth access to the best bedside position

MY-D019D-C is easy to load and unload in size and weight
Convenient for home consultation and field use

Application

Built-in ultrasonic detector can quickly detect the distance of the object being photographed, and easily and quickly adjust to the appropriate SID

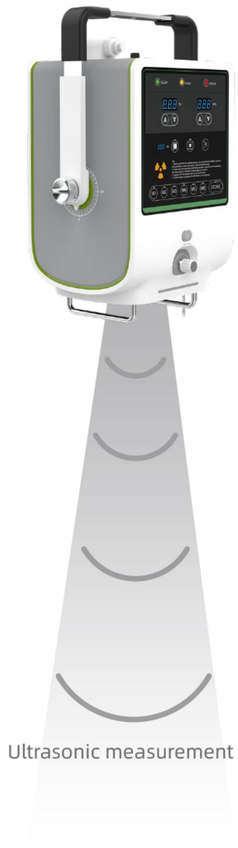

Clinical Images

Technical Parameters

Model	MY-D019D-C
System Requirements	
Electric source（V）	AC 110-120 AC 220V-240 50 / 60 Hz
Power（kW）	5
Flat Panel Detector	
Type	Mars1717v-VSI
Spatial Resolution（lp/mm）	3.6
Pixel Pitch（μm）	139
Active area（inch）	17 × 17
Data Interface	Wireless
Generator	
kV range（kVp）	40 -125
mAs range（mAs ）	1-100
mA range (mA)	10 -100
Ultrasonic ranging（mm）	500-1800
Light source on time（s）	30
Communication mode	RS-232/Bluetooth
Exposure mode	Wired/Wireless
X-ray Tube	
Focal spots（mm）	0.6/1.8
Anode Angle（°）	15
Small focus power（kW）	1.27
High focus power（kW）	5
Frame	
Size（mm³）	1425 x 660 x 780
Weight（kg）	54

Dimension

(Unit: mm)

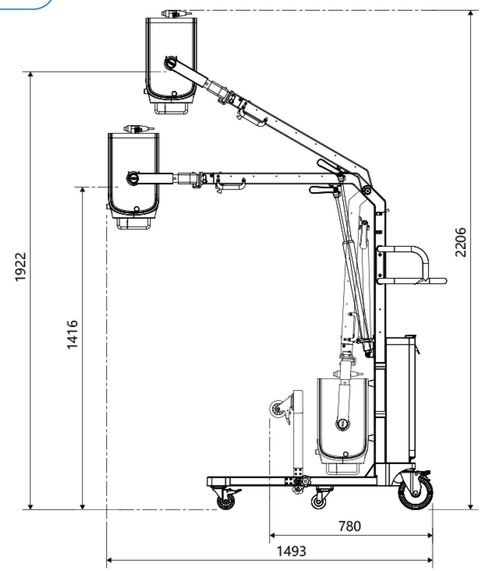

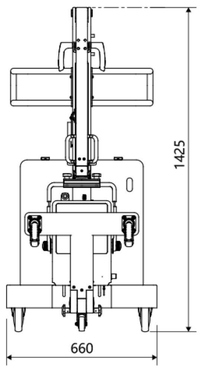

Digital mobile photographic-X - ray machine

Material object

Digital mobile photographic-X - ray machine

Material object